# PIZZA PREP TABLE REFRIGERATORS

SIMCO
CATERING EQUIPMENT

## EPF3480

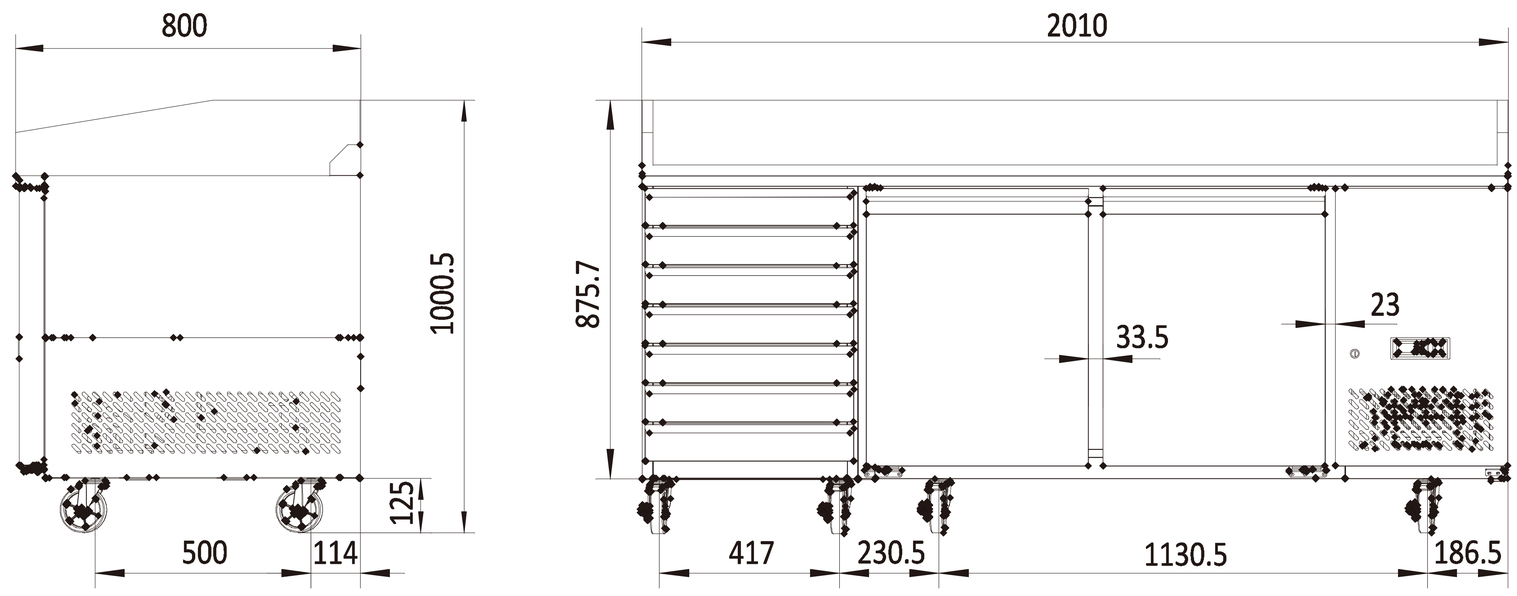


## EPF3485

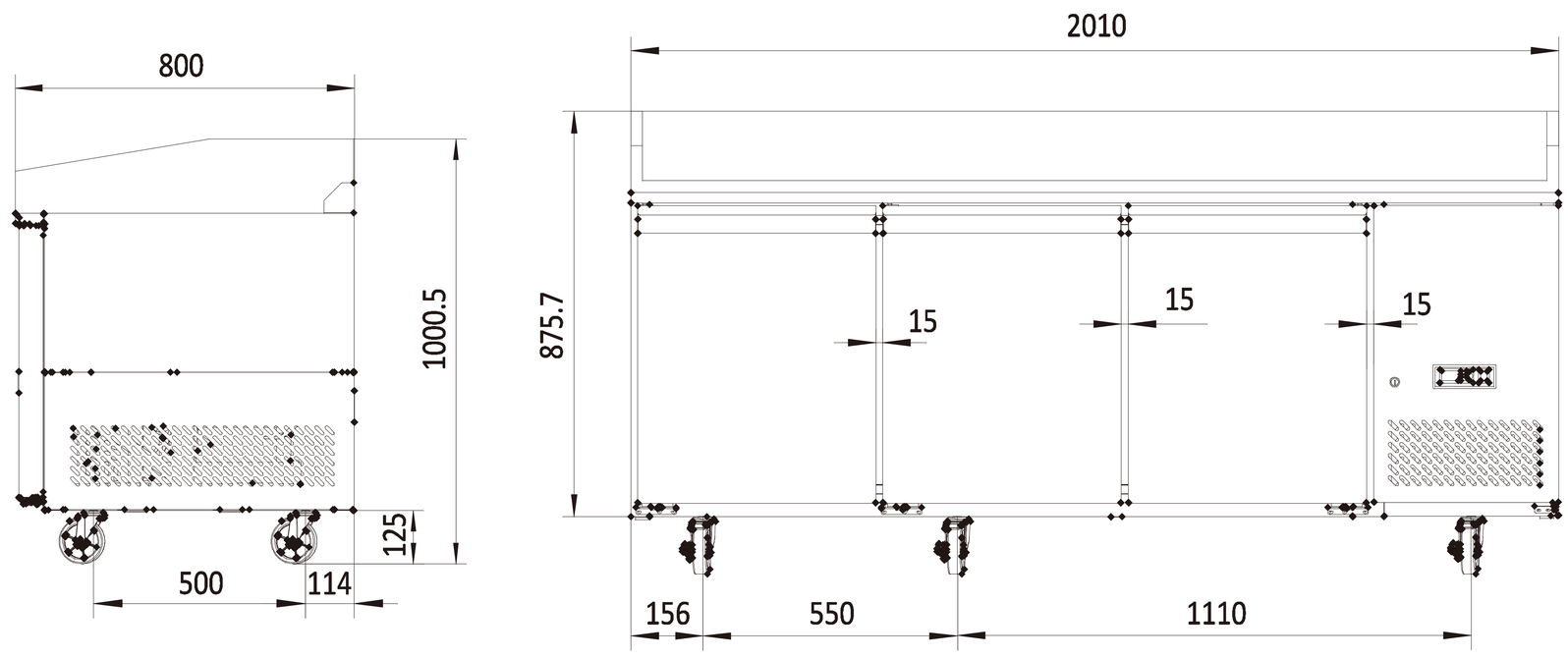


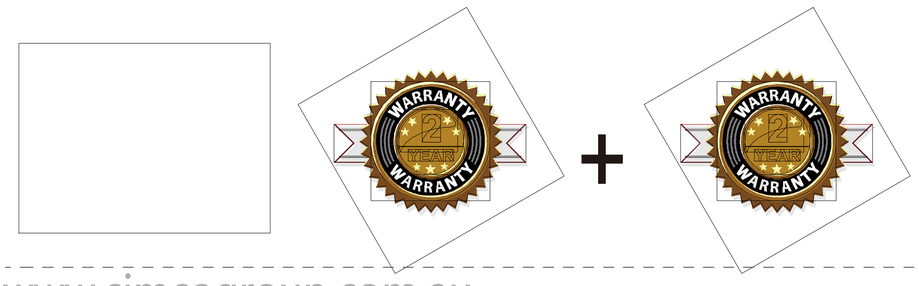


* 2 YEARS WARRANTY ON ALL PARTS & LABOUR
EXTRA 2 YEARS WARRANTY ON PARTS WHEN YOU REGISTER WITH US ONLINE